KLANN

Anlagentechnik

Core Belters

Schwerter Str. 200
D-58099 Hagen
Germany

Tel.: +49 (0)2331 968000
Fax: +49 (0)2331 968018
info@Klann-Anlagentechnik.de
www.Klann-Anlagentechnik.de

Core shooters with transport belt discharge, so called core belters, are the most productive core production machines. They are mainly used for the large batch production of cores in the automotive or fitting industry.

In comparison with standard core shooters the cores in core belters are automatically discharged on a belt and transported outside the machine. This mode of operation does not depend on the cycle starts of an operator after manual discharge of the core, which makes sure the core belter works always with the maximum productivity. Due to the design of KLANN core belters, where no machine table is used, the machine operations and movements are lowered to a minimum, resulting in far lower cycle times than in standard core shooters (see table 1).

Pic.1: KLANN core belter

The KLANN core belters are available for all standard core shooting processes, like Cold-, Hot-Box, CO_2-, Croning-processes.

Beside pure Cold-, Hot-Box or CO_2-machines also combination machines, using heating-plates and a gassing head can be supplied. The operation process in these core belters can be changed within minutes.

The reliability and the operation- and maintenance friendly design is based on different features, which can be described for hot-box core belters like following:

Core sand feed

The prepared core sand flows from the sand feeder, which is used as intermediate storage for the machine, into the hydraulically moved sand car, consisting of the sand cylinder and the shooting head. After sand filling the sand car is moved sideward into the shooting position, between the shooting valve and the core box. The shooting valve is pressed by means of a pneumatic cylinder against the sand car and against the core box to achieve the necessary sealing for the shooting process. The in standard core shooters used machine table lift does not exist, which saves important operation time.

The shooting process, where the sand is shot into the core box by fluidisation with compressed air is without screen cylinder insert. This design avoids the in other machines frequently necessary cleaning of the sand cylinder screen and the installation of level detectors in the sand cylinder is possible, which allow the operation with different shooting volumes in one machine. When using smaller core boxes only the adequate sand volume is fed into the shooting cylinder, otherwise non-used sand would be fluidised causing it's pre-hardening in the cylinder.

After the shooting process the sand car is moved backwards into the filling position, outside the hardening process where heat radiation or gas could cause the chemical reaction of remained core sand in the shooting head or cylinder.

Pic.2: View inside core belter with movable (left) and tiltable (right) core box clamping claw

Core box fixation

The core box clamping device consists of a fixed and a movable clamping jaw, which are carrying one half of the core box each. The movable jaw is used for opening of the core form and the fixed jaw for tilting and core push-out. This KLANN specific separation of the moving operations to each side of the core box and the position of the tilting centre shortens the movements to place the cores on the belt and therefore increase the productivity in comparison to other core belters.

Hydraulic control

To assure short cycle times the KLANN core shooters are equipped with a modern hydraulic drive. A sophisticated soft switching proportional valve control is used, to smoothly open the core boxes in the beginning and to follow up with a fast opening. This procedure avoids core destruction during opening of the clamping device. By using standard valves the cycle times could not been achieved and at faster movements the hydraulic system would be damaged by strokes in the hydraulic system.

The hydraulic tank with the necessary hydraulic equipment is situated outside the machine for easy access. The hydraulic unit is equipped with a high-value hydraulic pump, inlet and outlet filters, heat exchanger, and the necessary gauges and sensors.

Pic. 3: Side view of the core belter with opened access door and operation panel.

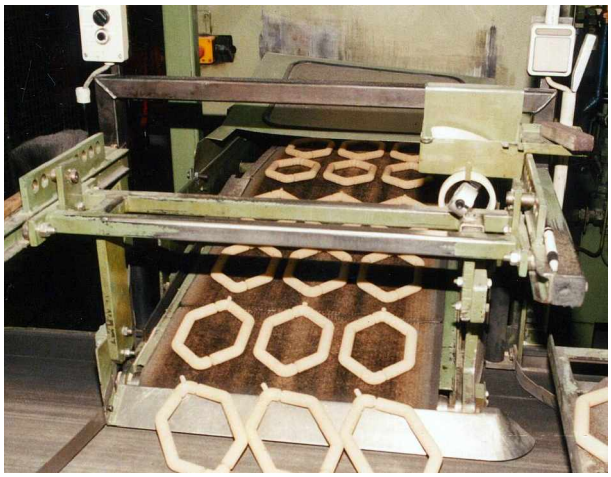

Pic. 4: View on discharge belt with produced cores

Cooling system
All machines are equipped with a large hydraulic tank and a heat exchanger, to avoid overheating of the machine in the rough foundry environment.

In Hot-Box machines the clamping claws front are insulated and the shooting head, the shooting plate and the mandrel installation plate are water cooled to avoid a heat expansion of the equipment which would cause leakage problems at the core boxes.

Process control and data storage
The machines are equipped with a Siemens control system type SPS S-7 and a Siemens operation panel. This equipment assures a high availability and a world-wide service. By using standard software, adaptations or extensions of the control system can be done by the customer, KLANN or third-parties.

The core box's specific parameters are stored in the PLC and the machine is moved automatically to the necessary position by using position encoders, no limit switches have to be adapted. These parameters include e. g. the clamping distance, the shooting pressure, the shooting and gassing time (cold-box) and the hardening temperature and time (hot-box). The data storage allows adapting the machine to new core-box requirements immediately and assures reproducible core quality.

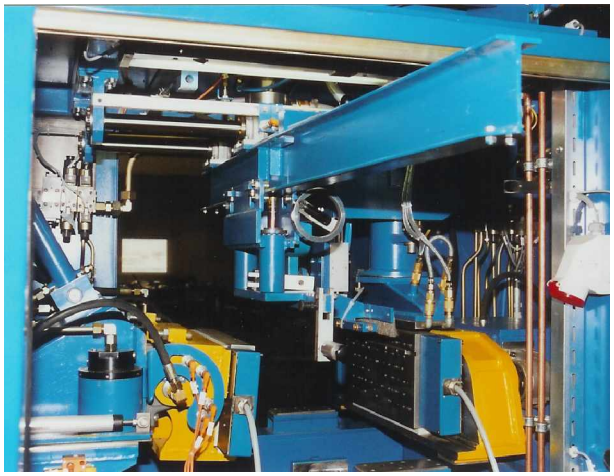

Pic.5: Core box changing device installed in the core belter.

Belt discharge
After the core discharge from the core box the core is placed on the belt conveyor and is transported stepwise to the front end of the machine, where it is picked up by a operator or a robot. Due to the stepwise movement of the belt with each cycle, the cores can be buffered on the belt.
By using a hydraulically driven scissor lift with a position encoder the transport belt is lifted for each cycle to lower the dropping height of the cores from the tilted core box half.

Due to the core buffering on the belt, one operator can handle several core belters, which reduces the labour cost in comparison to standard core shooters. The qualification requirements on operators of core belters are far lower than for classical core shooters as only the pick-up and the visual inspection of the cores is required.

Complete housing
To avoid personal injury of operators during the shooting process if the core box halves are not closed completely, the core belters are encased. Using wide opening side doors allow an easy access to the shooter for tool change or maintenance operations. The in the housing integrated windows and the lightening of the inner machine allows an easy supervision and quick intervention.

A support frame with integrated cleaning drawers are offered to keep the belters easily clean from core sand residues.

The KLANN core belters are available with the following options:

- hydraulic core box clamping devices;
- additional sand level sensors to operator with lower sand shooting volumes
- mandrel puling device
- loose parts pulling device
- core box and heating plate changing device
- automatic tilting claw adjustment to adapt machine to different core box thicknesses
- telescopic belt conveyor
- core handling robots
- light barrier detection of cores at belt end for machine shut down

These design details have shown it's performance and reliability in various applications. They assure a high productivity, high flexibility and low operating costs of the KLANN core belters.

Depending on the core design and volume, cycle times below 15 seconds can be achieved, including shooting and curing. This performance make these core belters the most productive machines available for the large batch production of small cores, like used for pipe fittings or valves.

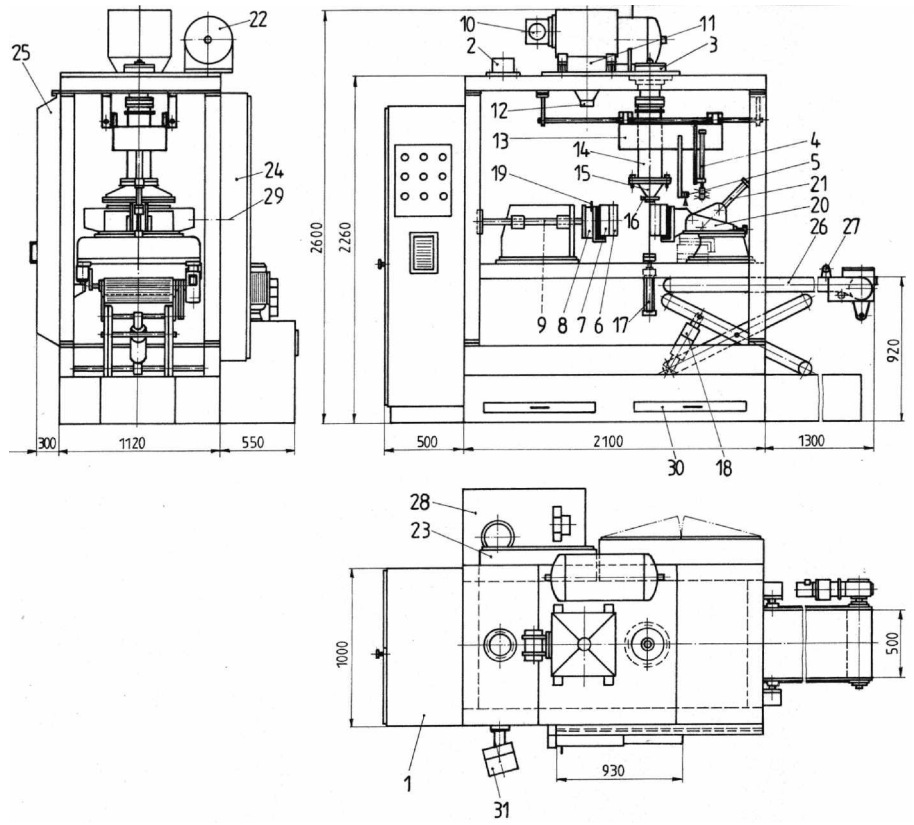

1 switch/control cabinet
2 off-gas flange
3 shooting and exhaust valve
4 air blow unit
5 sand wiper for upper core box
6 core box
7 heating plate, electrical
8 clamping jaw, fix
9 hydraulic cylinder for clamping device
10 vibrating device of sand feeder
11 feeder trough
12 inlet flap
13 sand bin car
14 sand bin
15 shooting head
16 water cooled shooting head
17 mandrel pulling device
18 cylinder for belt height adjustment
19 sand wiper of shooting head plate
20 tiltable clamping jaw with hydraulic core pushing device, manual adjustable
21 tilting cylinder
22 compressed air reservoir
23 valve cabinet for pneumatic control
24 safety protection
25 front door
26 core belt conveyor
27 light barrier
28 hydraulic unit
29 loosening part pulling device
30 drawer for cleaning
31 operator panel

Pic. 6: Data sheet of 5 litres hot-box core shooter with belt conveyor discharge, Type P5-BA/HB

	Unit	P5-BA/HB	P8-BA/HB	P15-BA/HB
Shooting volume	dm³	5	8	15
Sand storage volume	dm³	60	60	120
Shooting pressure	bar	1 - 6	1 - 6	1 – 6
Compressed air consumption per cycle	dm³	25	32	60
Cycle time, without heating, mandrel pulling. air blowing	Sec.	5	7	10
Core box dimensions				
min. width/half	mm	40	40	70
max. width/half	mm	110	110	150
max. length	mm	500	500	500
max. height	mm	250	300	300
Clamping way	mm	320	320	400
Width belt discharge	mm	500	500	500

Tab. 1: Technical data of Klann-core belters for Hot-Box

Also available from **Klann Anlagentechnik** for cast shops:

- Turn-key core shops
- Standard core shooters
- Core sand mixers/preparation plants
- Hoist gears for core sand transport
- Binder dosing systems
- Drum and container storage facilities for binders
- Core fraction recycling units
- Silo storage- and dosing systems
- Sand dedusters and cooler
- Pneumatic conveyors
- Automation and Control Systems
- Handling systems/robots for cores

Schwerter Str. 200 w D-58099 Hagen/Germany w Tel: +49 (0)2331 9680-00 w Fax: +49 (0)2331 9680-18
E-mail: info@Klann-Anlagentechnik.de